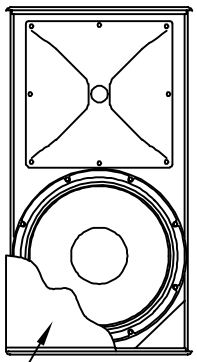

FRONT

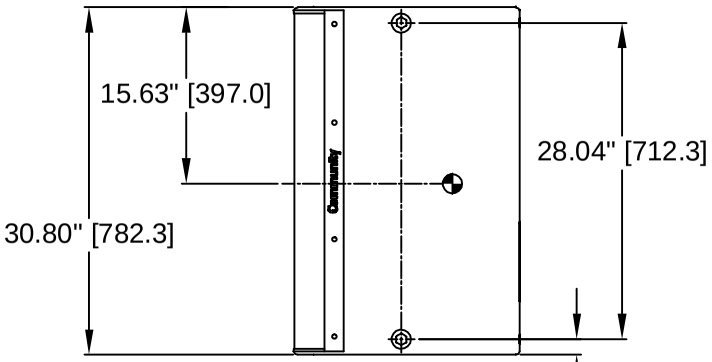

SIDES

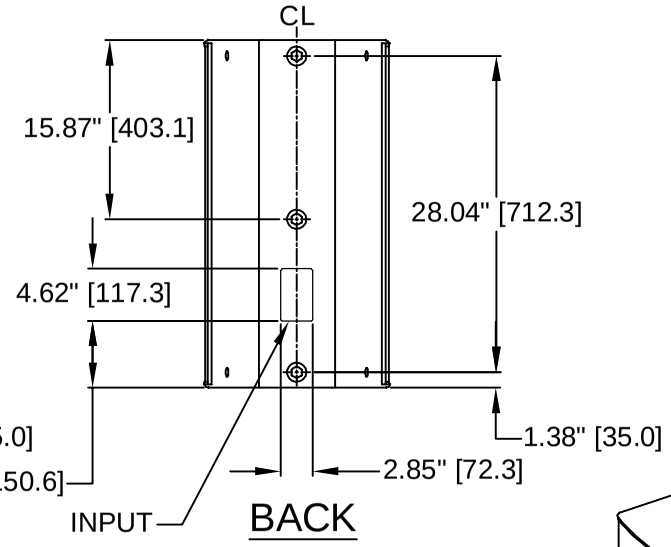

BACK

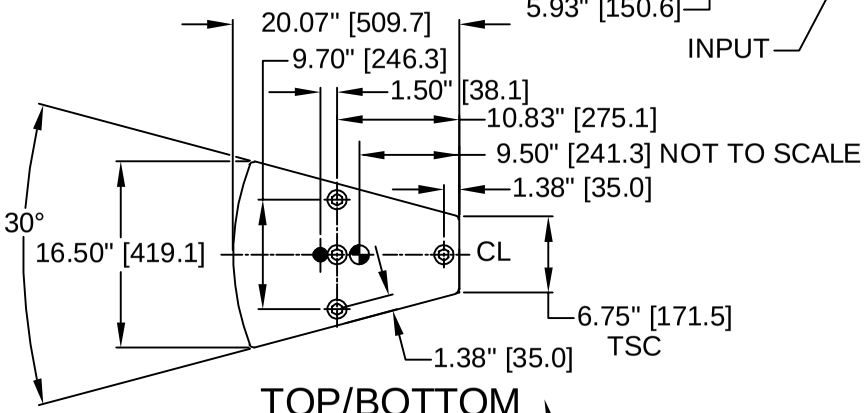

TOP/BOTTOM

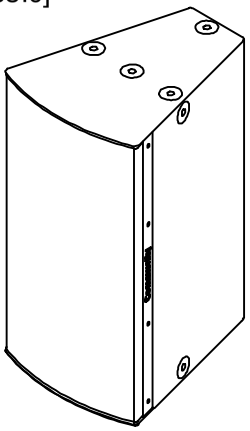

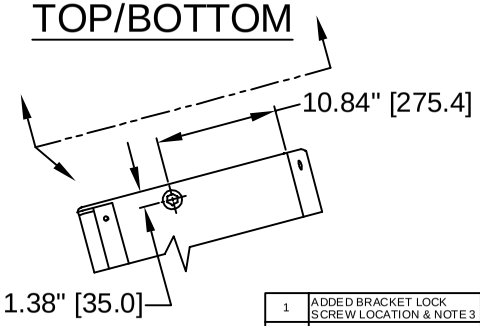

NOTES:

1. SYMBOL ⊕ INDICATES COG.
2. SYMBOL ◎ INDICATES MOUNTING POINT, M10 THREADED HOLE.
3. SYMBOL ● INDICATES M6 THEADED HOLE FOR U-BRACKET LOCK SCREW ONLY.
4. DRAWING REPRESENTATIVE OF IP6-1152WR64, IP6-1152WR66, IP6-1152WR94, IP6-1152WR96, IP6-1152WR99, IP6-1152WR26.
5. WEIGHT: LOUDSPEAKER ONLY: 63LBS. (28.6KG)

REV	DESCRIPTION	DATE
1	ADDED BRACKET LOCK SCREW LOCATION & NOTE 3	4.3.20

REVISIONS

TOLERANCES ON ALL DIMENSIONS UNLESS OTHERWISE NOTED TO BE:
ANGLES: ±.5° DECIMALS: ±.03"
METRIC: ±0.5mm

DIMENSIONS ACROSS CENTERLINES TO BE SYMMETRICAL

TSC = THEORETICAL SHARP CORNER

ALL DIMENSIONS IN in/mm U.O.S.

THIRD ANGLE PROJECTION

DO NOT SCALE DRAWING

Community
COMMUNITY PROFESSIONAL LOUDSPEAKERS
333 E FIFTH ST. CHESTER, PA 19013-4511 USA
TEL: (610)876-3400 FAX: (610)874-0190
www.communitypro.com

DRAWING TITLE: I SERIES IP6-1152WR

DWG NO. IP6-1152WR-2D | REV 1

SCALE NONE | SHEET 1 OF 1

THIS DRAWING HAS BEEN FURNISHED BY COMMUNITY LIGHT & SOUND, INC. THE INFORMATION AND KNOW-HOW THEREON MAY NOT BE USED NOR THE DRAWING REPRODUCED WITHOUT THE WRITTEN PERMISSION OF COMMUNITY. ALL REPRODUCTIONS WHOLE OR IN PART, INCLUDING VENDOR'S SHOP DRAWINGS SHALL BEAR OR REFER TO THIS STAMP.